Total Protection Solutions™

# ServiceTrack® ST 160

## System Features




- Providing the highest level of protection with the lowest let-through voltage in the industry
- Fail-Safe Design
- Optional Component Level Fusing
- Single pulse tested at independent 3rd party lab
- Form C dry relay contacts and audible alarm with silence button
- Two suppression technologies: MOV and all mode Enhanced Transient Filter
- UL 1283 Tracking Filter
- Ultra, Compact Footprint – efficiency and performance
- 30-Year Unlimited Free Replacement Warranty
- Weatherproof Nema 4 steel enclosure

## Product Specifications

### GENERAL SPECIFICATIONS

**Maximum Rated Surge Current:** 160kA per phase; 80kA per mode
**Application:** ANSI/IEEE C62.41 Location C, B & A. Ideal for distribution panels, branch panels and critical loads
**Design:** Optimum performing parallel hybrid with component level fusing
**Warranty:** 30-Year Unlimited Free Replacement
**Safety Listing:** UL 1449 4th Ed., Type 1 for Type 1 & Type 2 locations and UL 1283

### ELECTRICAL SPECIFICATIONS

**Modes of Protection:** All Modes. L-N, L-L, L-G, & N-G
**Input Power Frequency**: 40-440Hz (47-64 Hz with enhanced filter option)
**Response Time**: < 1 nanosecond
**Standard Monitoring**: Status indicator lights (one per phase & one service LED); Form C dry relay contacts for suppressor status; Audible alarm with silence button
**Short Circuit Current Rating**: 200 kAIC on all units.
No upstream over-current protection required on CLF unit.
Non CLF units require 60A Max fuse or breaker.

### MECHANICAL SPECIFICATIONS

**Dimensions (approx.)**: 11.50"H x 8.28"W x 6.28"D
(292 mm H x 210 mm W x 160 mm D)
**Enclosure**: Steel, Weatherproof. NEMA 4 (IP 56)
**Connection**: Hardwired via internal lugs #10 AWG-#2 AWG (5.26 mm2 - 26.7 mm2)
"-R" models come with #10 AWG leads
**Mounting**: Multi-point mounting feet
**Operating Environment:** -40° C to 70° C (-40° F to 160° F)
5% to 95% non-condensing humidity
Weight: 24 lbs. (10.9 kg)
Weight: 24 lbs. (10.9 kg)

FREE REPLACEMENT ★30 YEAR★ WARRANTY ★30 YEAR★

c UL us LISTED UL 1449

CE

### AVAILABLE CONFIGURATIONS

| Model Number | Description |
|---|---|
| TK-ST160-1P120 | 120VAC, 1ø 2-wire + grd |
| TK-ST160-1P240 | 240VAC, 1ø 2-wire + grd |
| TK-ST160-1S240 | 120/240VAC,1ø SPLIT-PHASE, 3-wire +grd |
| TK-ST160-1S480 | 277/480VAC, Single Phase, 3-wire + grd |
| TK-ST160-3Y208 | 120/208VAC, 3ø WYE, 4-wire + grd |
| TK-ST160-3Y380 | 220/380VAC, 3ø WYE, 4-wire + grd |
| TK-ST160-3Y400 | 230/400VAC, 3ø WYE, 4-wire + grd |
| TK-ST160-3Y415 | 240/415VAC, 3ø WYE, 4-wire + grd |
| TK-ST160-3Y480 | 277/480VAC, 3ø WYE, 4-wire + grd |
| TK-ST160-3Y600 | 347/600VAC, 3ø WYE, 4-wire + grd |
| TK-ST160-3D240 | 120/240VAC, 3ø high-leg DELTA, 4-wire + grd (B phase must be 208V) |
| TK-ST160-240NN | 240VAC, 3ø DELTA, 3-wire + grd |
| TK-ST160-380NN | 380VAC, 3ø DELTA, 3 wire + grd |
| TK-ST160-480NN | 480VAC, 3ø DELTA, 3-wire + grd |
| TK-ST160-600NN | 600VAC, 3ø DELTA, 3-wire + grd |

### AVAILABLE OPTIONS *Order as a Suffix* *Example: TK- ST160-3Y208-FL*

- Enhanced Transient Filter (ETF): add suffix "-F"
- Component Level Fusing (CLF): add suffix "-L"
- Surge Counter: add suffix "-B"
- NEMA 4X Stainless Steel Enclosure: add suffix "-XX"
- Recessable model 4.28" deep: add suffix "-R"

**Order as a Separate Item (30 Year Warranty)**

- ST-FMP-120/160 (for Flush-Mount Plate Kit)
- Non-Fused Disconnect Switch:
  DN-200KAIC-60A-1 (for Nema 4 steel)
  DN-200KAIC-60A-XX-1 (for Nema 4 stainless steel)

### EMI / RFI FILTER ATTENUATION – MIL STANDARD 220B

| Frequency | Attenuation |
|---|---|
| 1kHz | 2 dB |
| 10kHz | 17 dB |
| 100kHz | 40 dB |
| 1MHz | 18 dB |
| 10MHz | 6 dB |
| 100MHz | 1 dB |
| Max. Attenuation Frequency | 41 dB @ 106 kHz |

Total Protection Solutions™

# ServiceTrack® ST 160

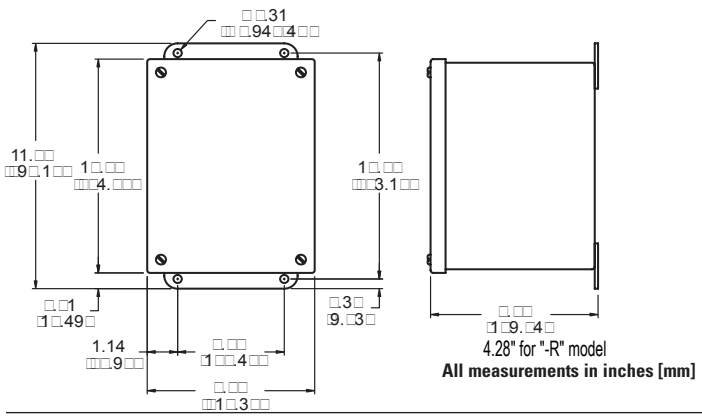


4.28" for "-R" model

**All measurements in inches [mm]**

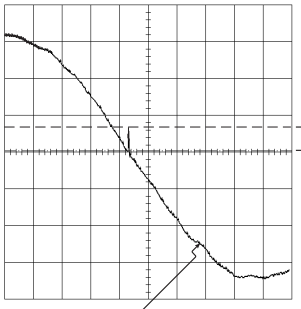

**Peak Let-Through Voltage Level - 40V**

**Reference Level Zero Crossing of AC Sine Wave**

**AC Sine Wave**

**For 120/208V Configuration**

| |
|---|
| **ANSI/IEEE C62.41.1 Category A1 Ring Wave 2000V, 67A Test Plot** |
| **L-N Mode, Dynamic, 180° Phase Angle, 6" Leads, Positive Polarity 1 msec/div Horizontal 500 Mega samples/sec 55V/div Vertical** |

| | | | | | ANSI/IEEE C62.41.1-2002, C62.41.2-2002, & C62.45-2002 Measured Limited Voltage | | | UL Voltage Ratings |
|---|---|---|---|---|---|---|---|---|
| | | | | | ETF Models | All Models | All Models | UL 1449 2nd Edition/ |
| Model Number | System Voltage | System Configuration | Protection Mode | MCOV | A1 Ring Wave 2kV, 67A 180° Phase Angle | B3/C1 Impulse Wave 6kV, 3kA 90° Phase Angle | C3 Impulse Wave 20kV, 10kA 90° Phase Angle | UL1449 3rd & 4th Ed. Voltage Protection Ratings |
| **TK-ST160-1P120** | 120V | 1-Phase 2-wire+grnd | **L-N** | **150V** | 40V | 651V | 960V | 400/700 |
| | | | L-G | 150V | 76V | 640V | 1010V | 400/700 |
| | | | N-G | 150V | 54V | 646V | 860V | 400/700 |
| **TK-ST160-1P240** | 240V | 1-Phase 2-wire+grnd | L-N | 320V | 42V | 978V | 1437V | 800/1000 |
| | | | L-G | 320V | 61V | 969V | 1523V | 800/1000 |
| | | | N-G | 320V | 50V | 979V | 1340V | 800/1000 |
| **TK-ST160-1S240** | 120/240V | 1-Phase 3-wire+grnd | L-N | 150V | 40V | 651V | 960V | 400/700 |
| | | | L-G | 150V | 76V | 640V | 1010V | 400/700 |
| | | | L-L | 300V | 46V | 1041V | 1310V | 800/1200 |
| | | | N-G | 150V | 54V | 646V | 860V | 400/700 |
| **TK-ST160-3Y208** | 120/208V | 3-Phase WYE 4-wire+grnd | L-N | 150V | 40V | 651V | 960V | 400/700 |
| | | | L-G | 150V | 76V | 640V | 1010V | 400/700 |
| | | | L-L | 300V | 46V | 1041V | 1310V | 800/1200 |
| | | | N-G | 150V | 54V | 646V | 860V | 400/700 |
| **TK-ST160-3Y380** | 220/380V | 3-Phase WYE 4-wire+grnd | L-N | 320V | 42V | 968V | 1437V | 800/1000 |
| | | | L-G | 320V | 61V | 979V | 1523V | 800/1000 |
| | | | L-L | 640V | 60V | 1792V | 2190V | 1500/1800 |
| | | | N-G | 320V | 50V | 967V | 1340V | 800/1000 |
| **TK-ST160-3Y400** **TK-ST160-3Y415** | 230/400V 240/415V | 3-Phase WYE 4-wire+grnd | L-N | 320V | 42V | 968V | 1437V | 800/1000 |
| | | | L-G | 320V | 61V | 979V | 1523V | 800/1000 |
| | | | L-L | 640V | 60V | 1792V | 2190V | 1500/1800 |
| | | | N-G | 320V | 50V | 967V | 1340V | 800/1000 |
| **TK-ST160-3Y480** | 277/480V | 3-Phase WYE 4-wire+grnd | L-N | 320V | 42V | 968V | 1437V | 800/1000 |
| | | | L-G | 320V | 61V | 979V | 1523V | 800/1000 |
| | | | L-L | 640V | 60V | 1792V | 2190V | 1500/1800 |
| | | | N-G | 320V | 50V | 967V | 1340V | 800/1000 |
| **TK-ST160-3Y600** | 347/600V | 3-Phase WYE 4-wire+grnd | L-N | 420V | 56V | 1295V | 1710V | 1200/1500 |
| | | | L-G | 420V | 99V | 1295V | 1783V | 1200/1500 |
| | | | L-L | 840V | 76V | 2130V | 2893V | 2000/2500 |
| | | | N-G | 420V | 88V | 1292V | 1610V | 1200/1500 |
| **TK-ST160-3D240** | 120/240V | 3-Phase high-leg DELTA 4-wire+grnd | L-N | 150V | 40V | 654V | 960V | 400/700 |
| | | | H-N | 320V | 42V | 984V | 1437V | 800/1000 |
| | | | L-G | 150V | 76V | 645V | 1010V | 400/700 |
| | | | H-G | 320V | 61V | 988V | 1523V | 800/1000 |
| | | | L-L | 320V | 46V | 1044V | 1310V | 800/1000 |
| | | | H-L | 470V | 46V | 1250V | 1640V | 1500/1500 |
| | | | N-G | 150V | 54V | 654V | 860V | 400/700 |
| **TK-ST160-240NN** | 240V | 3-Phase DELTA 3-wire+grnd | L-G | 320V | 565V | 980V | 1150V | 800/1000 |
| | | | L-L | 320V | 31V | 981V | 1303V | 800/1000 |
| **TK-ST160-380NN** | 380V | 3-Phase DELTA 3-wire+grnd | L-G | 550V | 912V | 1689V | 1870V | 1500/1800 |
| | | | L-L | 550V | 39V | 1697V | 1950V | 1500/1800 |
| **TK-ST160-480NN** | 480V | 3-Phase DELTA 3-wire+grnd | L-G | 550V | 912V | 1689V | 1870V | 1500/1800 |
| | | | L-L | 550V | 39V | 1697V | 1950V | 1500/1800 |
| **TK-ST160-600NN** | 600V | 3-Phase DELTA 3-wire+grnd | L-G | 750V | 1253V | 2202V | 2420V | 2000/2500 |
| | | | L-L | 750V | 36V | 2217V | 2410V | 2000/2500 |

ETF = Enhanced Transient Filter (-F suffix). All tests performed with 6" (152 mm) lead length, positive polarity.
All voltages are peak values (±10%) measured from the zero reference point at the phase angles referenced above using a 10 µs/div display rate and 500 Mega samples/sec sampling rate.
Specifications subject to change without notice.See web site www.TPSsurge.com for latest revisions.

©2017 Total Protection Solutions, LLC
ServiceTrack® ST and Total Protection for Life®
are registered trademarks of Total Protection Solutions, LLC
12.23.16/ST120



For Technical Support:
TEL: 800.647.1911 www.TPSsurge.com
P.O. Box 3760, Winter Park, Fl 32790