Total Protection Solutions™

ServiceTrack® ST 120

System Features



- Providing the highest level of protection with the lowest let-through voltage in the industry
- Fail-Safe Design
- Optional Component Level Fusing
- Single pulse tested at independent 3rd party lab
- Form C dry relay contacts and audible alarm with silence button
- Two suppression technologies: MOV and all mode Enhanced Transient Filter
- UL 1283 Tracking Filter
- Ultra, Compact Footprint – efficiency and performance
- 30-Year Unlimited Free Replacement Warranty
- Weatherproof Nema 4 steel enclosure

Product Specifications

GENERAL SPECIFICATIONS

Maximum Rated Surge Current: 120kA per phase; 60kA per mode
Application: ANSI/IEEE C62.41 Location C, B & A. Ideal for distribution panels, branch panels and critical loads
Design: Optimum performing parallel hybrid with component level fusing
Warranty: 30-Year Unlimited Free Replacement
Safety Listing: UL 1449 4th Ed., Type 1 for Type 1 & Type 2 locations and UL 1283

ELECTRICAL SPECIFICATIONS

Modes of Protection: All Modes. L-N, L-L, L-G, & N-G
Input Power Frequency: 40-440Hz (47-64 Hz with enhanced filter option)
Response Time: < 1 nanosecond
Standard Monitoring: Status indicator lights (one per phase & one service LED); Form C dry relay contacts for suppressor status; Audible alarm with silence button
Short Circuit Current Rating: 200 kAIC on all units.
No upstream over-current protection required on CLF unit.
Non CLF units require 60A Max fuse or breaker.

MECHANICAL SPECIFICATIONS

Dimensions (approx.): 11.50"H x 8.28"W x 6.28"D
(292 mm H x 210 mm W x 160 mm D)
Enclosure: Steel, Weatherproof. NEMA 4 (IP 56)
Connection: Hardwired via internal lugs #10 AWG-#2 AWG
(5.26 mm2 - 26.7 mm2)
"-R" models come with #10 AWG leads
Mounting: Multi-point mounting feet
Operating Environment: -40° C to 70° C (-40° F to 160° F)
5% to 95% non-condensing humidity
Weight: 24 lbs. (10.9 kg)
Weight: 24 lbs. (10.9 kg)

FREE REPLACEMENT
★ 30 YEAR ★ WARRANTY ★ 30 YEAR ★

c UL us LISTED
UL 1449

AVAILABLE CONFIGURATIONS

Model Number	Description
TK-ST120-1P120	120VAC, 1ø 2-wire + grd
TK-ST120-1P240	240-277V, 1ø 2-wire + grd
TK-ST120-1S240	120/240VAC, 1ø SPLIT-PHASE, 3-wire + grd
TK-ST120-3Y208	120/208VAC, 3ø WYE, 4-wire + grd
TK-ST120-3Y380	220/380VAC, 3ø WYE, 4-wire + grd
TK-ST120-3Y400	230/400VAC, 3ø WYE, 4-wire + grd
TK-ST120-3Y415	240/415VAC, 3ø WYE, 4-wire + grd
TK-ST120-3Y480	277/480VAC, 3ø WYE, 4-wire + grd
TK-ST120-3Y600	347/600VAC, 3ø WYE, 4-wire + grd
TK-ST120-3D240	120/240VAC, 3ø high-leg DELTA, 4-wire + grd (B phase must be 208V)
TK-ST120-240NN	240VAC, 3ø DELTA, 3-wire + grd
TK-ST120-380NN	380VAC, 3ø DELTA, 3 wire + grd
TK-ST120-480NN	480VAC, 3ø DELTA, 3-wire + grd
TK-ST120-600NN	600VAC, 3ø DELTA, 3-wire + grd

AVAILABLE OPTIONS *Order as a Suffix* *Example: TK- ST120-3Y208-FL*

- Enhanced Transient Filter (ETF): add suffix "-F"
- Component Level Fusing (CLF): add suffix "-L"
- Surge Counter: add suffix "-B"
- NEMA 4X Stainless Steel Enclosure: add suffix "-XX"
- Recessable model 4.28" deep: add suffix "-R"

Order as a Separate Item (30 Year Warranty)

- ST-FMP-120/160 (for Flush-Mount Plate Kit)
- Non-Fused Disconnect Switch:
  DN-200KAIC-60A-3/4 (for Nema 4 steel)
  DN-200KAIC-60A-XX-3/4 (for Nema 4 stainless steel)

EMI / RFI FILTER ATTENUATION – MIL STANDARD 220B

Frequency	Attenuation
1kHz	2 dB
10kHz	17 dB
100kHz	40 dB
1MHz	18 dB
10MHz	6 dB
100MHz	1 dB
Max. Attenuation Frequency	41 dB @ 106 kHz

Made in U.S.A.

Total Protection Solutions

ServiceTrack® ST 120

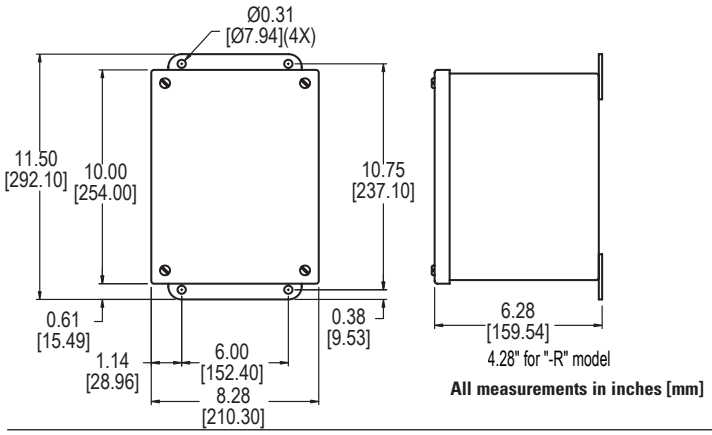

All measurements in inches [mm]

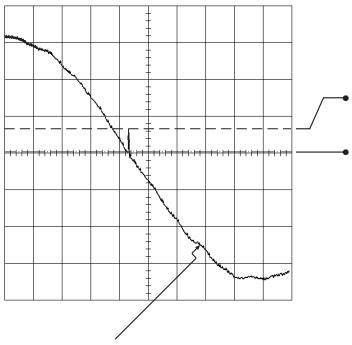

For 120/208V Configuration

ANSI/IEEE C62.41.1 Category A1 Ring Wave 2000V, 67A Test Plot
L-N Mode, Dynamic, 180° Phase Angle, 6" Leads, Positive Polarity 1 msec/div Horizontal 500 Mega samples/sec 55V/div Vertical

					ANSI/IEEE C62.41.1-2002, C62.41.2-2002, & C62.45-2002 Measured Limited Voltage			UL Voltage Ratings
Model Number	System Voltage	System Configuration	Protection Mode	MCOV	ETF Models A1 Ring Wave 2kV, 67A 180° Phase Angle	All Models B3/C1 Impulse Wave 6kV, 3kA 90° Phase Angle	All Models C3 Impulse Wave 20kV, 10kA 90° Phase Angle	UL 1449 2nd Edition/ UL1449 3rd & 4th Ed. Voltage Protection Ratings
TK-ST120-1P120	120V	1-Phase 2-wire+grnd	L-N	150V	40V	651V	960V	400/700
			L-G	150V	76V	640V	1010V	400/700
			N-G	150V	54V	646V	860V	400/700
TK-ST120-1P240	240-277V	1-Phase 2-wire+grnd	L-N	320V	42V	978V	1437V	800/1000
			L-G	320V	61V	969V	1523V	800/1000
			N-G	320V	50V	979V	1340V	800/1000
TK-ST120-1S240	120/240V	1-Phase 3-wire+grnd	L-N	150V	40V	651V	960V	400/700
			L-G	150V	76V	640V	1010V	400/700
			L-L	300V	46V	1041V	1310V	800/1200
			N-G	150V	54V	646V	860V	400/700
TK-ST120-3Y208	120/208V	3-Phase WYE 4-wire+grnd	L-N	150V	40V	651V	960V	400/700
			L-G	150V	76V	640V	1010V	400/700
			L-L	300V	46V	1041V	1310V	800/1200
			N-G	150V	54V	646V	860V	400/700
TK-ST120-3Y380	220/380V	3-Phase WYE 4-wire+grnd	L-N	320V	42V	968V	1437V	800/1000
			L-G	320V	61V	979V	1523V	800/1000
			L-L	640V	60V	1792V	2190V	1500/1800
			N-G	320V	50V	967V	1340V	800/1000
TK-ST120-3Y400 **TK-ST120-3Y415**	230/400V 240/415V	3-Phase WYE 4-wire+grnd	L-N	320V	42V	968V	1437V	800/1000
			L-G	320V	61V	979V	1523V	800/1000
			L-L	640V	60V	1792V	2190V	1500/1800
			N-G	320V	50V	967V	1340V	800/1000
TK-ST120-3Y480	277/480V	3-Phase WYE 4-wire+grnd	L-N	320V	42V	968V	1437V	800/1000
			L-G	320V	61V	979V	1523V	800/1000
			L-L	640V	60V	1792V	2190V	1500/1800
			N-G	320V	50V	967V	1340V	800/1000
TK-ST120-3Y600	347/600V	3-Phase WYE 4-wire+grnd	L-N	420V	56V	1295V	1710V	1200/1500
			L-G	420V	99V	1295V	1783V	1200/1500
			L-L	840V	76V	2130V	2893V	2000/2500
			N-G	420V	88V	1292V	1610V	1200/1500
TK-ST120-3D240	120/240V	3-Phase high-leg DELTA 4-wire+grnd	L-N	150V	40V	654V	960V	400/700
			H-N	320V	42V	984V	1437V	800/1000
			L-G	150V	76V	645V	1010V	400/700
			H-G	320V	61V	988V	1523V	800/1000
			L-L	320V	46V	1044V	1310V	800/1000
			H-L	470V	46V	1250V	1640V	1500/1500
			N-G	150V	54V	654V	860V	400/700
TK-ST120-240NN	240V	3-Phase DELTA 3-wire+grnd	L-G	320V	565V	980V	1150V	800/1000
			L-L	320V	31V	981V	1303V	800/1000
TK-ST120-380NN	380V	3-Phase DELTA 3-wire+grnd	L-G	550V	912V	1689V	1870V	1500/1800
			L-L	550V	39V	1697V	1950V	1500/1800
TK-ST120-480NN	480V	3-Phase DELTA 3-wire+grnd	L-G	550V	912V	1689V	1870V	1500/1800
			L-L	550V	39V	1697V	1950V	1500/1800
TK-ST120-600NN	600V	3-Phase DELTA 3-wire+grnd	L-G	750V	1253V	2202V	2420V	2000/2500
			L-L	750V	36V	2217V	2410V	2000/2500

ETF = Enhanced Transient Filter (-F suffix). All tests performed with 6" (152 mm) lead length, positive polarity.
All voltages are peak values (±10%) measured from the zero reference point at the phase angles referenced above using a 10 µs/div display rate and 500 Mega samples/sec sampling rate.
Specifications subject to change without notice.See web site www.TPSsurge.com for latest revisions.

©2017 Total Protection Solutions, LLC
ServiceTrack® ST and Total Protection for Life®
are registered trademarks of Total Protection Solutions, LLC
12.23.16/ST120

For Technical Support:
TEL: 800.647.1911 www.TPSsurge.com
P.O. Box 3760, Winter Park, Fl 32790