LoadTrack™ LT-30A

System Features



- Provides surge protection against harmful transient voltages that exceed the nominal operating voltage of AC and DC critical dedicated control loads
- Ideal for protecting the PLC's, Building management systems, OEM & systems integration controls and other microprocessor-based loads
- Compact, fail-safe design allows flexible installation into electrical/control panels
- Dual Component-Level Fusing (CLF) standard
- Enhanced Transient Filter (ETF) standard
- 15-year Unlimited Free Replacement Warranty
- Reduce lockups, glitches and reprogramming issues

Product Specifications

General Specifications

Maximum Rated Surge Current: 20kA per phase

Application: ANSI.IEEE C62.41 Location C, B & A

Design: Ultra compact, fail-safe design with dual component-level fusing

Warranty: 15-Year Unlimited Free Replacement

Safety Listing: ETL recognized component under UL 1449 4th Edition as a type 4 SPD, cETL, and under UL1283 as an electromagnetic filter.

Electrical Specifications

Input Power Frequency: 47-64Hz

Maximum Continuous Operating Current: 30 amps

Modes of Discrete Suppression Circuitry:
All modes L-N, L-G & N-G

Response Time: < 1 nanosecond

Standard Monitoring: Status indicating light

Short Circuit Current Rating: 100kAIC short circuit current rating with a 30 amp max Class T fuse, and 5kAIC with a 30 amp breaker.

Mechanical Specifications

Dimensions: 3.94"L x 1.40"W x 2.28"H

Enclosure: Polycarbonate Rated V0

Connection Method: Hard-wired via box terminals #16AWG - #8 AWG

Mounting Method: Screw down or Din-Rail mounted.

Operating Temperature: -40° C to 85° C (-40° F to 185° F)

Weight: 1.00 lbs. (0.45 kg)

Options:

Dry Relay Contacts: add suffix "-RC". Form C (N/O, N/C) relay contacts rated at 1 amp at 120VAC

LT Performance Specifications

ANSI/IEEE C62.41.1-2002, C62.41.2-2002, & C62.45-2002 Measured Limited Voltage

Model Number *(Working Voltage)*	Mode	A1 Ring Wave 2kV, 67A 180° Phase Angle	A3 Ring Wave 6kV, 200A 180° Phase Angle	B3/C1 Impulse Wave 6kV, 3kA 90° Phase Angle
TK-LT24-30A-DIN2	L-N	44V	83V	152V
(5-30 VAC)	L-G	75V	91V	173V
(5-38 VDC)	N-G	50V	85V	173V
TK-LT48-30A-DIN2	L-N	44V	115V	197V
(25-50 VAC)	L-G	97V	145V	225V
(24-65 VDC)	N-G	49V	117V	193V
TK-LT120-30A-DIN2	L-N	47V	127V	438V
(48-150 VAC)	L-G	92V	239V	496V
(48-200 VDC)	N-G	47V	128V	470V
TK-LT250-30A-DIN2	L-N	49V	130V	851V
(120-260 VAC)	L-G	90V	234V	955V
(120-300 VDC)	N-G	48V	130V	960V

All voltages are peak values (+10%) from the zero reference point at the phase angles referenced above using a 10 µs/div display rate and 500MS/s sampling rate. Specifications subject to change without notice, see web site www.tpssurge.com for latest revisions.

EMI/RFI Filter Attenuation—Mil Standard

Frequency	Attenuation
1kHz	1dB
10kHz	5dB
100kHz	29dB
1MHz	32dB
10MHz	8dB
20MHz	9dB

All measurements in inches [mm]

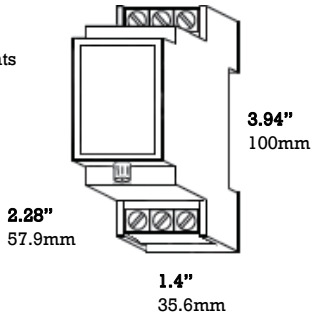



© 2017, Total Protection Solutions, LLC. Made in U.S.A. LT-V2-2/26/10

For Technical Support
TEL: 800-647-1911 www.TPSsurge.com